

Flow calculation method

1. Liquid(volume) $Q=14.28Cv\frac{\sqrt{P_1-P_2}}{\sqrt{G}}$

Note:Don't consider for viscosity influence less than 20 mm^2

2. Gas (Volume) $Q=198.3CvP_1\frac{1}{\sqrt{G}}(P_2\le\frac{P_1}{1.89})$

Note: Standard atmospheric conditions:760mmHg, 15.6℃ . Q: L/Min

Note: P_1 Inlet pressure kgf/cm^2 P_2: Outlet pressure kgf/cm^2

△ P: P_1 - P_2 G: Specific Gravity (Water=1. Air=1)

Cv: Flow Coefficient Cv ≈ 1.16 x Kv Kv≈0.853x Cv

Commonly Used Pressure Units Conversion

$1kgf/cm^2$ =1bar=0.1MPa=100KPa=14.5PSI

☎+86 574 82823826 | Fax +86 574 82823826 | sales@xhnotion.com | Web: www.xhnotion.com

SOLENOID VALVE

MINIATURE PILOT SOLENOID VALVE

Miniature pilot valves are one of the most fundamental parts in hydraulic machinery as well and pneumatic machinery.

They allow fluid flow into different paths from one or more sources. It not only has a micro size, but it's very quiet when it works.

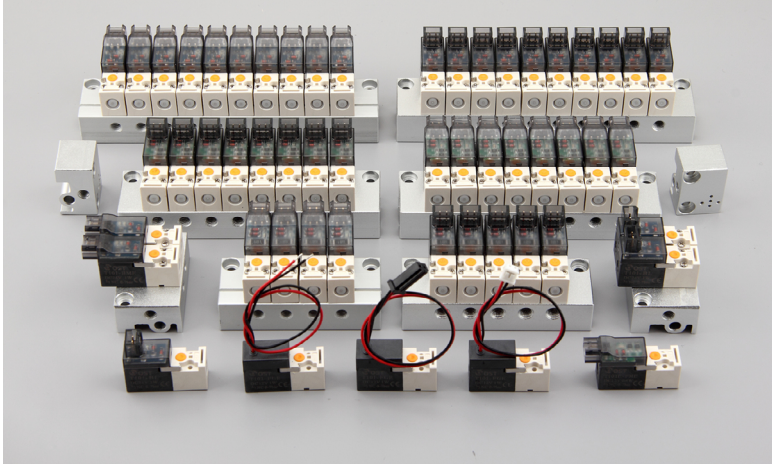

FEATURES

• Small size & Convenient installaton

It is ideal for installation in confined space, which can be either installed on a single base or on the manifolds. It can replace the majority of similar products at home and abroad for its great compatibility in installation size and also can be used as the pilot control valve for SY series and 4V series solenoid valve.

• Energy -saving & Environment friendly

The power consumption of the standard type is only 1w, And the energy -saving type is only 0.3w.

• Large flow& Wide application

It has large flow rate which can be used not only for compact cylinder, swing cylinder and other slider series, but also for the pilot control of processing valve. The large flow type can especially meet different needs, because it increase the flow rate by 50% on the basis of the standard type.

• Quick Response & Multi-functional

It can response within10ms, realizing vacuum function easily.

• Multi-specifications & All models

Distinguished by voltage, there are AC220V,AV110V,DC24V,DC12V,DC6V and DC3V. Distinguished by interface mode, there are vertical type(L type), the horizontal type (M type) and direct line type(G type) etc.

• Long life & More sustainable

Super safe even in the situation of 24-hour continuous work and 100% on-load factor.

GENERAL DATA

Model	XV10
Operation Type	3/2 N.C.; 3/2 N.O.; 2/2 N.C.
Working Medium	Filtered Air/Inert gases
Ambient Temperature	-10~80 ℃
Working Pressure	0-7bar
Orifice size	ϕ0.75mm(P),/ϕ1.0mm(R)
Flow rate at 6 bar(Δp1bar)	16NL/min(P1→P2), 23NL/min(P2→P3)

COIL DATA

Electrical Connector	Vertical type(L)/Horizontal type(M)/Direct line type(G)
Stand Voltage	DC24V/12V/6V/3V; AC220V/110V
Power	1W/1.2W double power
Insulation	H Class
Service life	> 50 million times
Duty Cycle	ED 100%
Max Operating Frequency	30Hz
Operating Voltage Tolerance	+/- 10%
Response Time	Less than 10ms
Degree of pretection	IP65

HOW TO ORDER

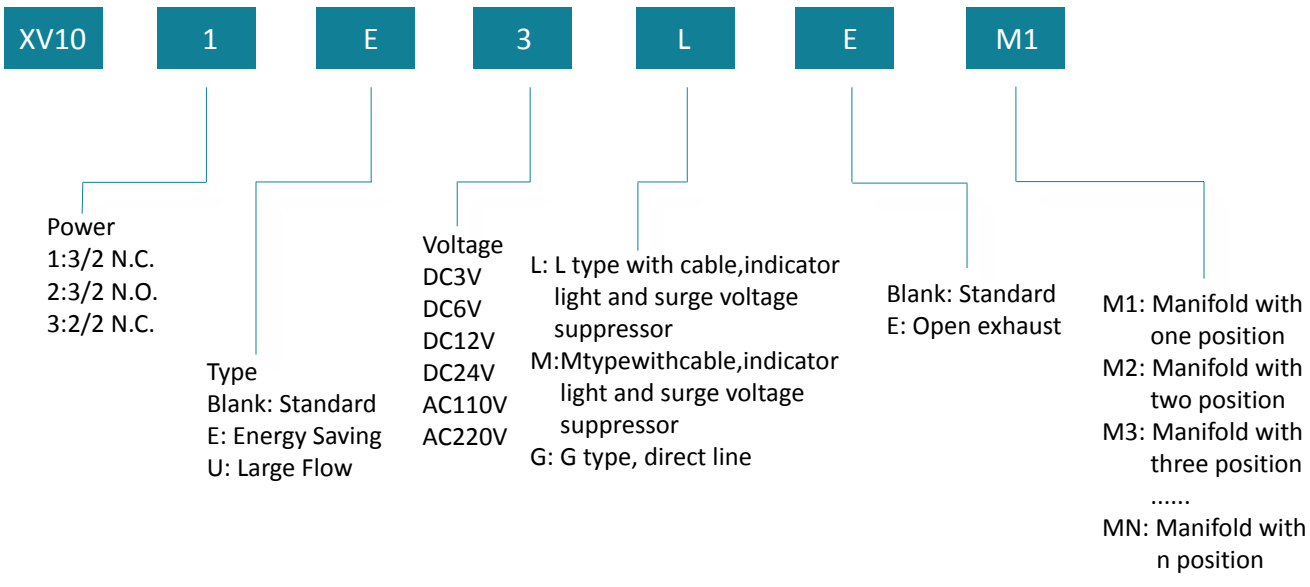

☎+86 574 82823826 | Fax +86 574 82823826 | sales@xhnotion.com | Web: www.xhnotion.com

XV10 OVERALL DRAWING

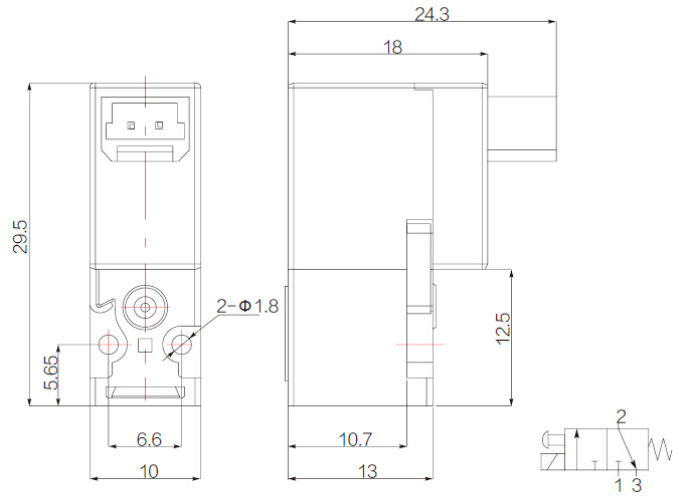



XV10 L Type

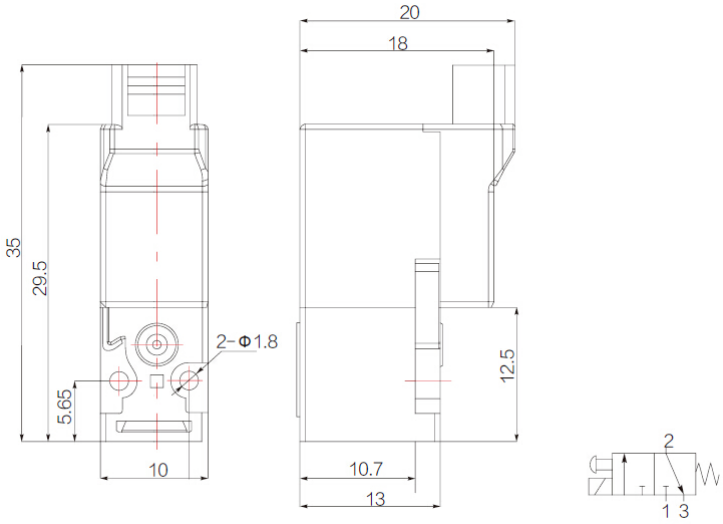

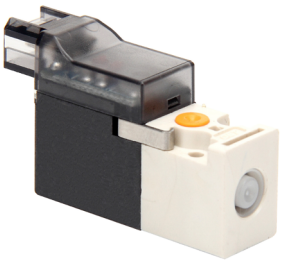

XV10 M Type

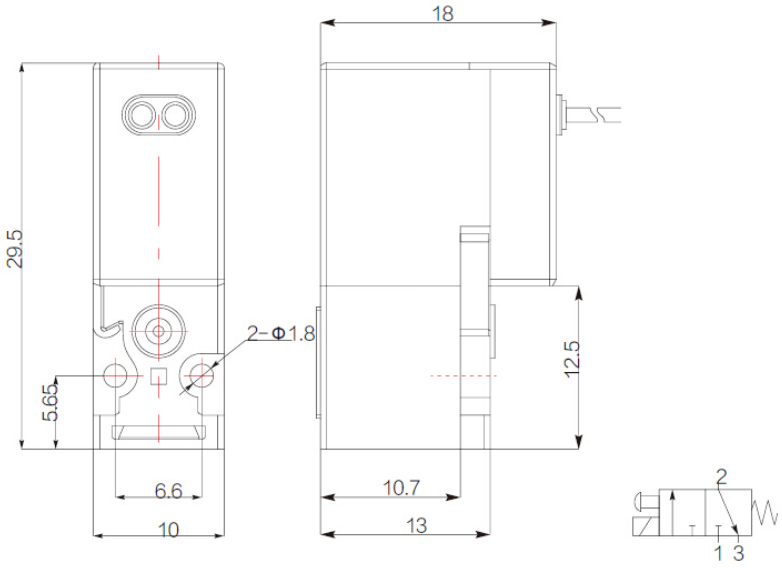



XV10 G Type

MANIFOLD OVERALL DRAWING

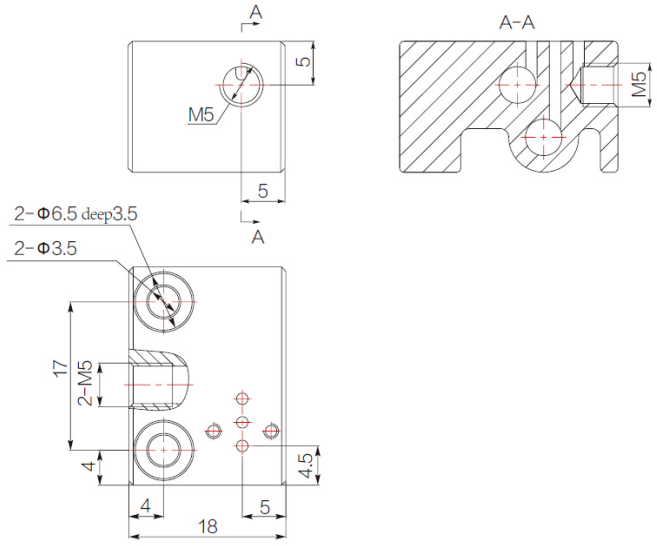

Manifold For One Valve

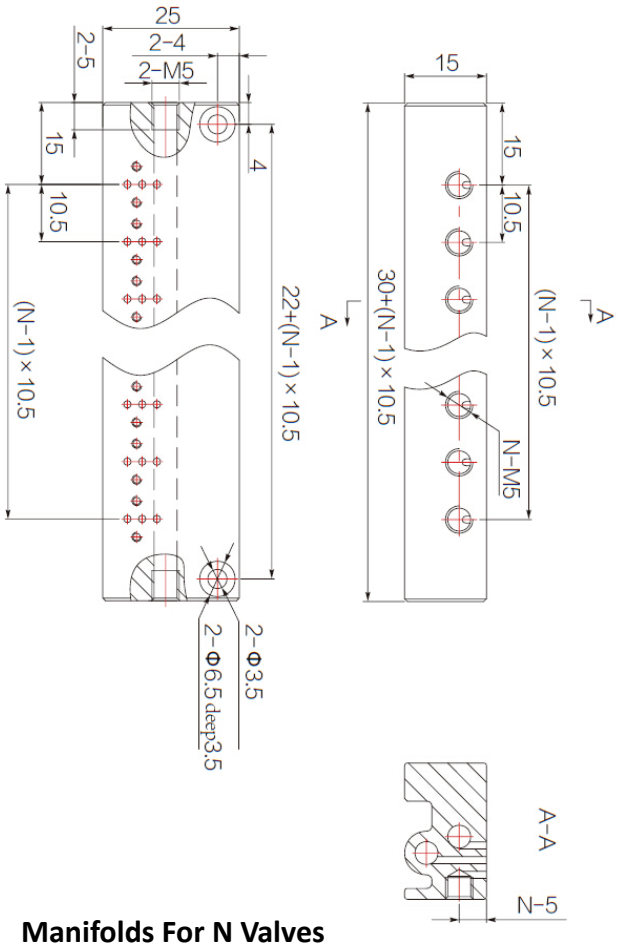

Manifolds For N Valves

INSTALLATION DRAWING

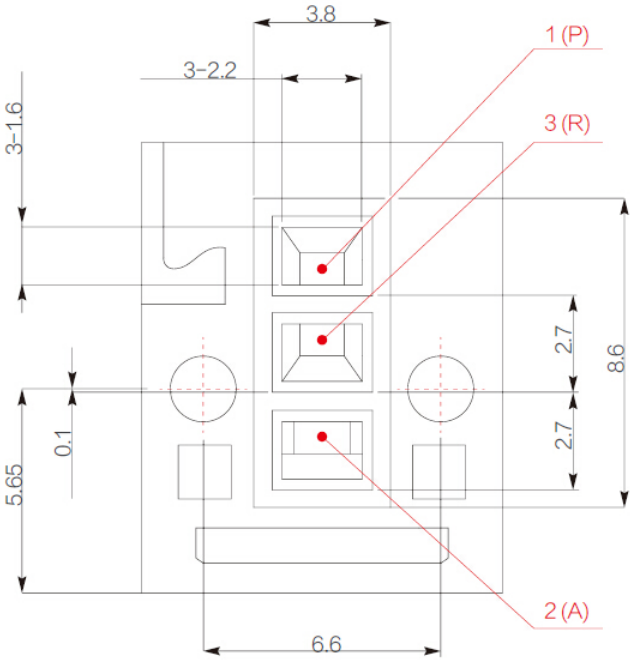

☎+86 574 82823826 | Fax +86 574 82823826 | sales@xhnotion.com | Web: www.xhnotion.com

RECOMMENDED PRODUCTS

• Characteristics of Large Flow Type

Large Flow Rate:
The flow rate has promoted 50% above on the basis of the standard type, can better meet your needs.

Energy-saving and Low Temperature Rise:
The power only reaches to 0.6W and the temperature rise is very low even in an energized state for a long time.

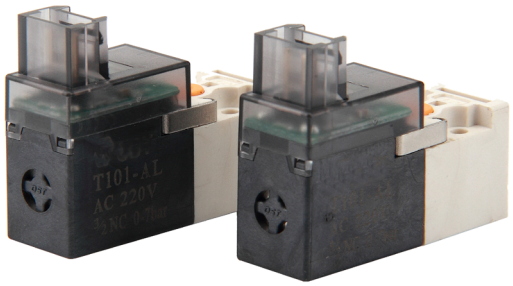

• Characteristics of the energy-saving type

Energy saving and low temperature rise:
The power only reaches to 0.3W and the temperature rise is very low even in an energized state for a long time. Under the energ-saving type, it can be divided into AC type and direct exhaust type.

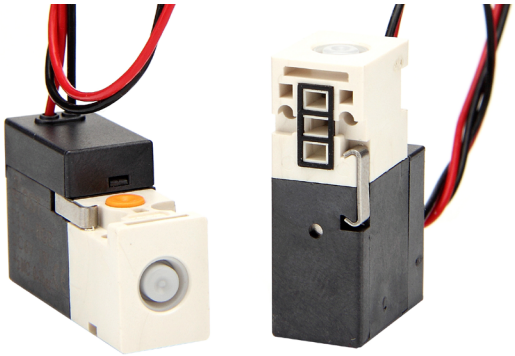

Note:

Do not reverse the direction when the plug line accesses to the circuit, the red wire should be connected to the positive and the black is connected to the negative.

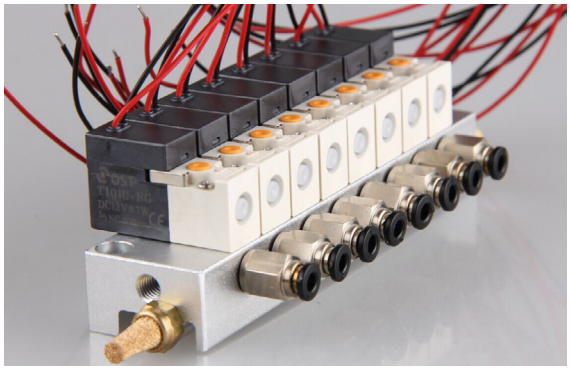

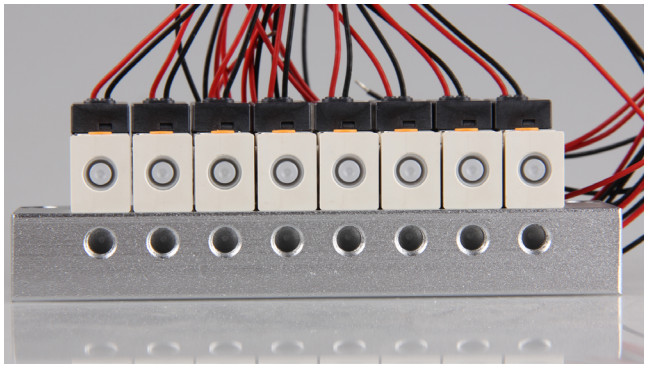

MINIATURE PILOT VALVE APPLICATION

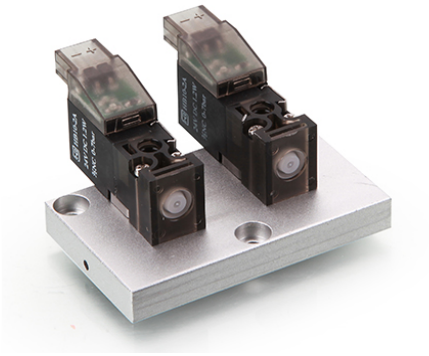

Oxygen Concentrator Valve

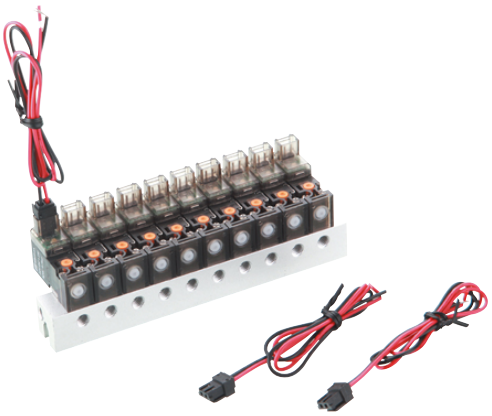

Inkjet Printer Valve

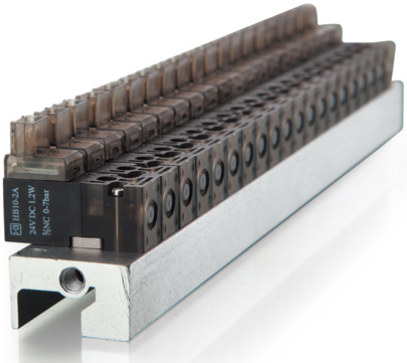

Sock Machine 20 jointed Valves



Carpet Machine Valve

MINIATURE PILOT VALVE ACCESSORIES



M5 Plug



Stainless Steel Cross Screw



Wiring Connector

☎+86 574 82823826 | Fax +86 574 82823826 | sales@xhnotion.com | Web: www.xhnotion.com

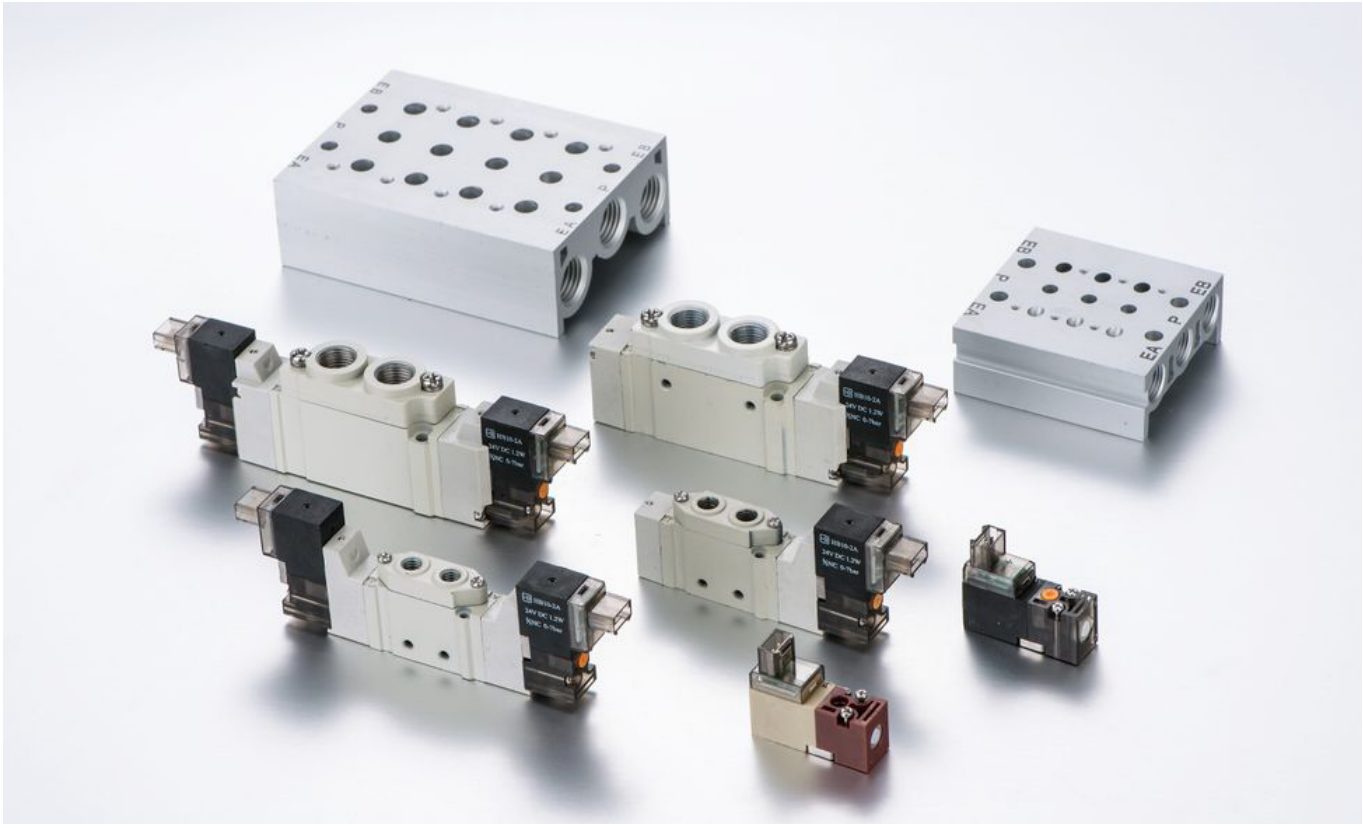

FEATURES

- **Large Flow**
  Featured flow at 1300 L/min(Cv=1.32), meet the demand of large boreand long stroke cylinder.

- **Low Requirement Quality Of Air Resource**
  Coxial structure design with better anti-dust function than spool type valve.

- **Reliable Quality Sealing With Longer Durability**
  Coxial structure design avoids direct friction between seal and valve body. Significantly increased the life of sealing and valve body. Sealing material is polyurethane to ensure better durability.

HOW TO ORDER

MFH	5	06	AC220V	W
Type	Position	Port Size	Standard Voltage	Wiring Form
MFH: Single head, Normally closed MOFH: Single head, Normally open JMFH: Double head JMFDH: Double head with dominant signal	5: 5/2 way	M5: M5 06: 1/8" 08: 1/4"	DC12V DC24V AC110V 50HZ/60HZ AC220V 50HZ/60HZ AC380V 50HZ/60HZ	Blank: standard connector LD: Brown/White with lighting connector W: Lead wire type

MFH508



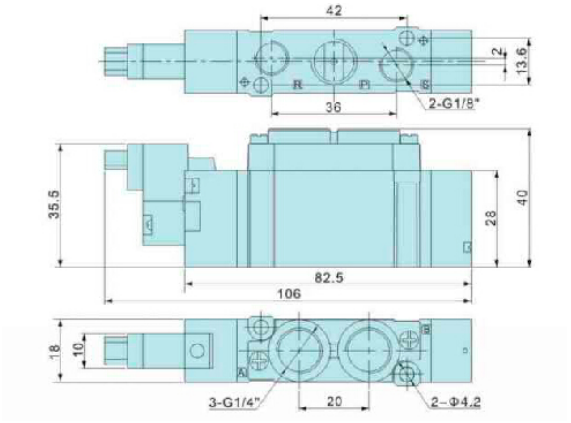

JMFH508



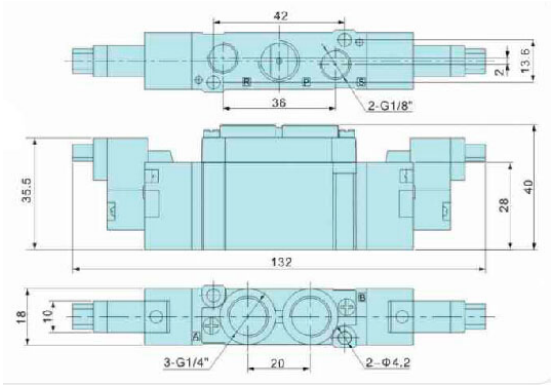

MFH5M5

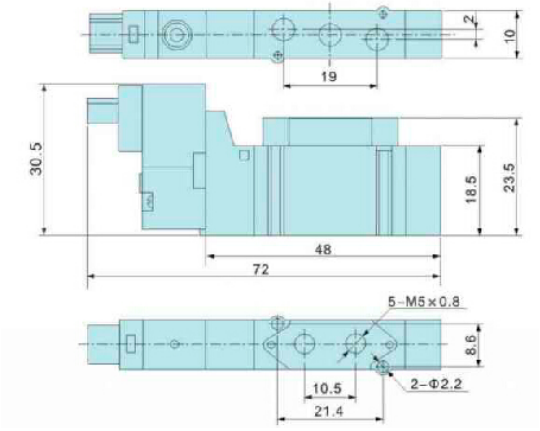

JMFH5M5

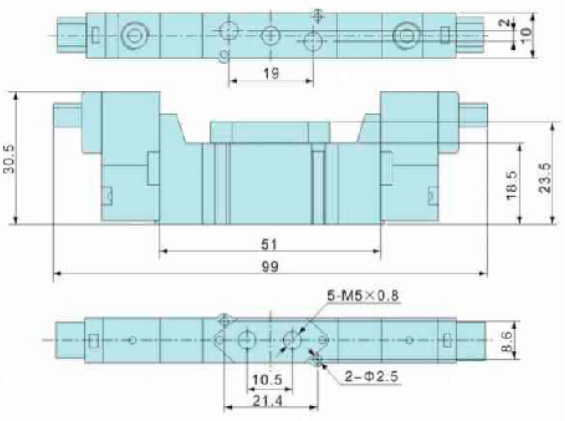

MFH506

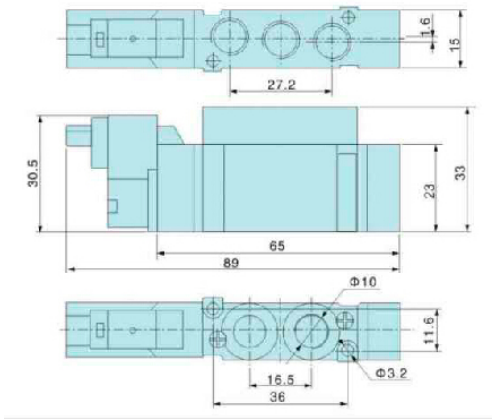

JMFH506

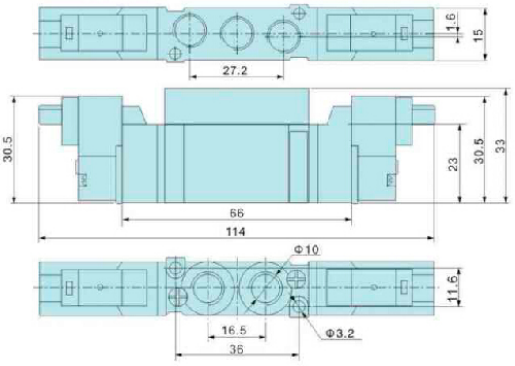

☎+86 574 82823826 | Fax +86 574 82823826 | sales@xhnotion.com | Web: www.xhnotion.com

SOLENOID VALVE

HI-PRESSURE DIRECTIONAL VALVE



• High pressure directional valve is designed in strengthened stop type with high operating pressure. It is safe and reliable and has been widely used in high pressure pneumatic system, such as bottle blowing machine .It is especially successfully used in the production equipment of high capacity polyester bottles with special shape.

SPECIFICATIONS

Model	YH23JD-8 YH23JD-8P2	YH23JD-15 YH23JD-15P2
Port size	G1/4"	G1/2"
Operating pressure	0.15~2.4Mpa	
Change frequency	≤ 0. 04s	≤ 0. 08s
Effective area	≥20mm2	≥60mm2
Ambient temperature	-10~55 C	
Media temperature	-5~50 C	
Operating life	≥1,500,000 times	

HOW TO ORDER

YH23J	D	8	P2	AC24V
Model 3/2 way	Coil Type D: Single head	Port Size 8: G1/4" 15: G1/2"	Guide Type Blank: Internal Pilot P2: External Pilot	Voltage 12V DC 24V DC 110V AC 220V AC 230V AC

OVERALL DRAWING

YH23JD-8

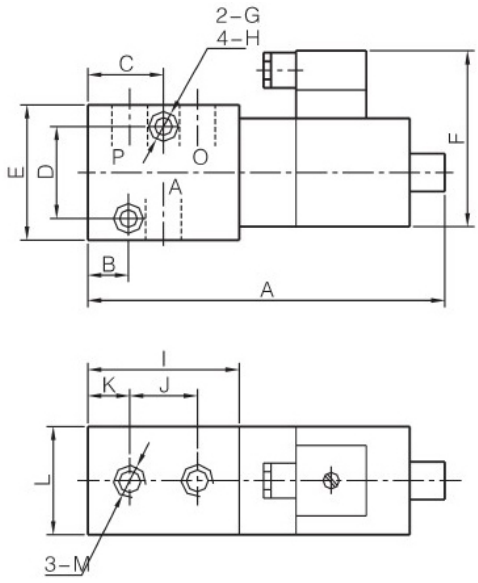

YH23JD-8P2

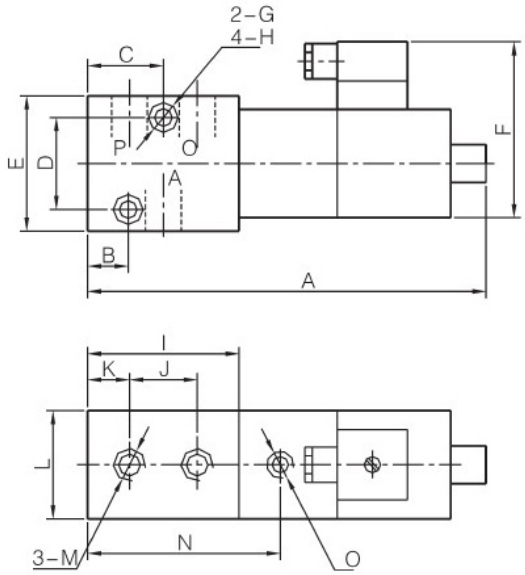

Model	Port size	A	B	C	D	E	F	G	H	I	J	K	L	N	O
YH23JD-8	G1/4"	132	15	28	35	50	65	7	11	56	26	15	40	-	-
YH23JD-8P2	G1/4"	145												75	G1/8"

YH231D-15

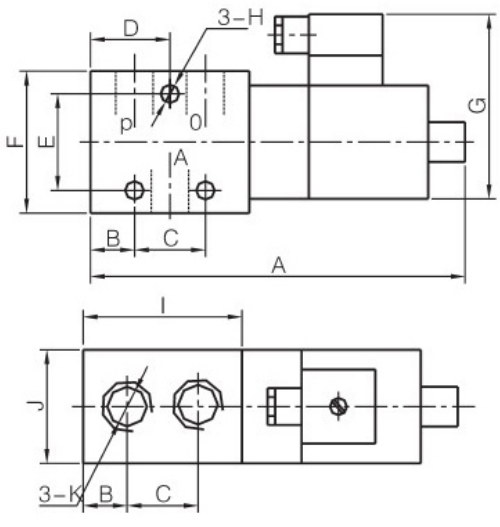

YH23JD-15P2

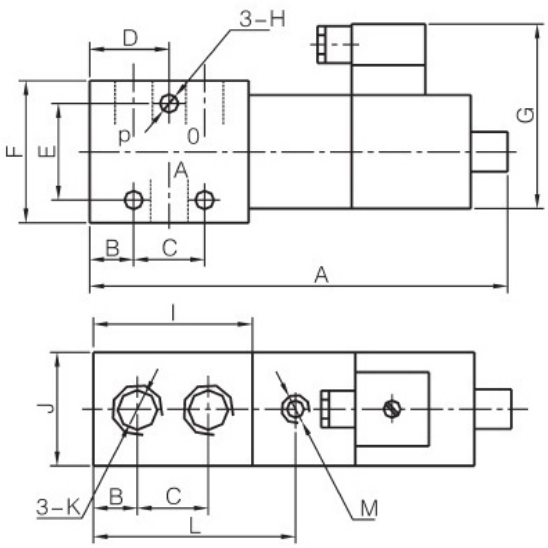

Model	Port size	A	B	C	D	E	F	G	H	I	J	N	O
YH23JD-15	G1/2"	140	15	35	32.5	40	60	65	7	65	40	-	-
YH23JD-15P2	G1/2"	157										84.5	G1/8"

☎+86 574 82823826 | Fax +86 574 82823826 | sales@xhnotion.com | Web: www.xhnotion.com

SPECIFICATION

Model	3V1-06
Operation	Direct
Working Medium	Filtered Air
Ambient Temperature	-10~60 ℃
Air Outlet Diameter	1mm
Working Pressure	0-0.8 Mpa
Max Pressure	1.2 Mpa
Power Consumption	IP 65
Wiring/Connector	Cable/Lead Wire or DIN Connector
Body Material	Aluminum Alloy
Switching Frequency	10 Cycles/Sec
Insulation	F Class
Operating Voltage Tolerance	+/- 10%
Response Time	0.05Sec
Flow Aperture	ϕ1mm

HOW TO ORDER

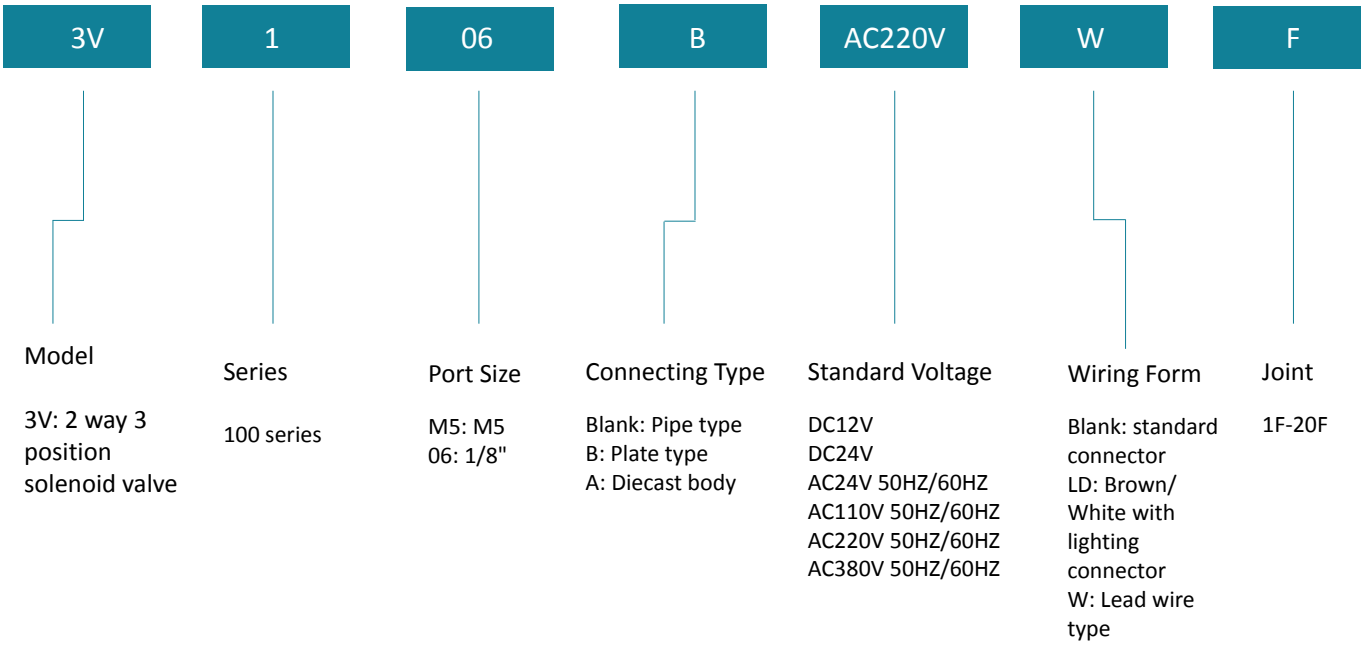



Model	Description	Thread	Flow (Cv)	Voltage
3V1-M5-DC12	1F-20F	M5	0.23	DC 12V
3V1-M5-DC24	1F-20F	M5	0.23	DC 24V
3V1-M5-AC24	1F-20F	M5	0.23	AC 24V
3V1-M5-AC110	1F-20F	M5	0.23	AC 110V
3V1-M5-AC220	1F-20F	M5	0.23	AC 220V



Model	Description	Thread	Flow (Cv)	Voltage
3V1-06-DC12	1F-20F	1/8	0.23	DC 12V
3V1-06-DC24	1F-20F	1/8	0.23	DC 24V
3V1-06-AC24	1F-20F	1/8	0.23	AC 24V
3V1-06-AC110	1F-20F	1/8	0.23	AC 110V
3V1-06-AC220	1F-20F	1/8	0.07	AC 220V



Model	Description	Thread	Flow (Cv)	Voltage
3V1-06A-DC12	1F-20F	1/8	0.23	DC 12V
3V1-06A-DC24	1F-20F	1/8	0.23	DC 24V
3V1-06A-AC24	1F-20F	1/8	0.23	AC 24V
3V1-06A-AC110	1F-20F	1/8	0.23	AC 110V
3V1-06A-AC220	1F-20F	1/8	0.23	AC 220V



Model	Description	Thread	Flow (Cv)	Voltage
3V1-06B-DC12	1F-20F	1/8	0.23	DC 12V
3V1-06B-DC24	1F-20F	1/8	0.23	DC 24V
3V1-06B-AC24	1F-20F	1/8	0.23	AC 24V
3V1-06B-AC110	1F-20F	1/8	0.23	AC 110V
3V1-06B-AC220	1F-20F	1/8	0.23	AC 220V

☎+86 574 82823826 | Fax +86 574 82823826 | sales@xhnotion.com | Web: www.xhnotion.com

3V1-06(M5)

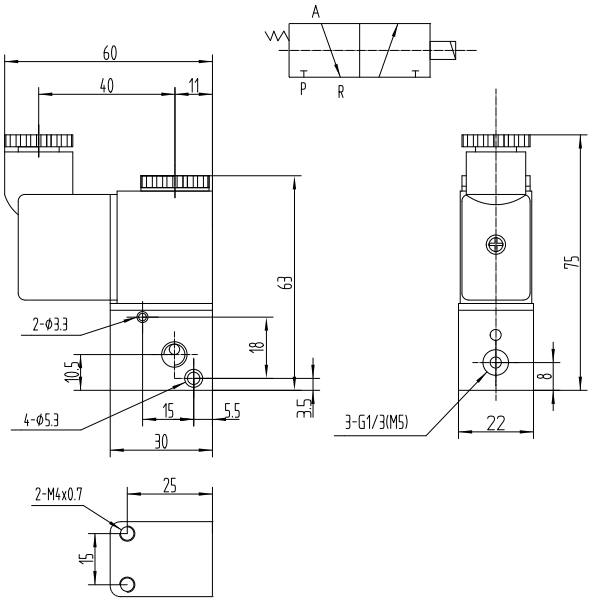

3V1-06A

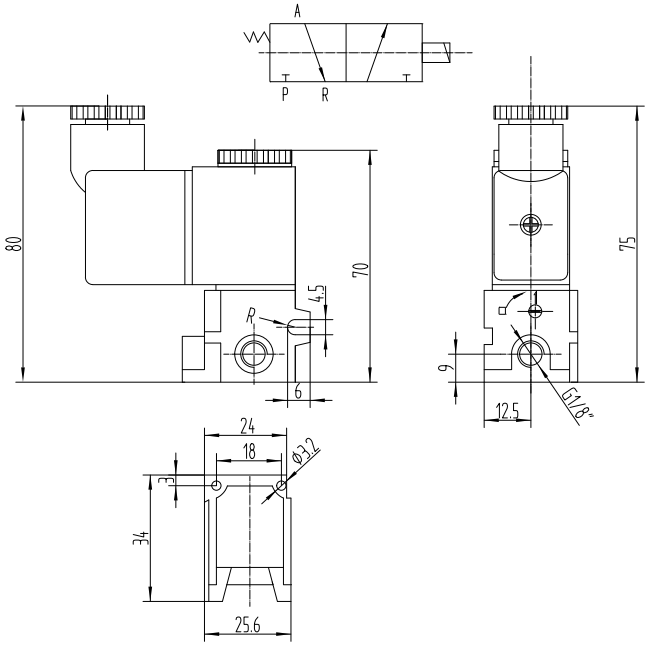

3V1-06(M5)-nF

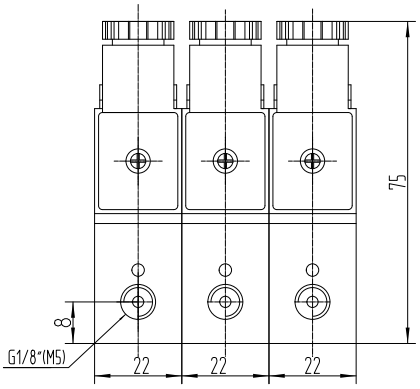

3V1-06A-nF

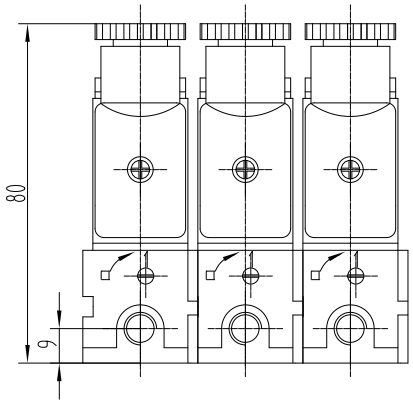

3V1-06B

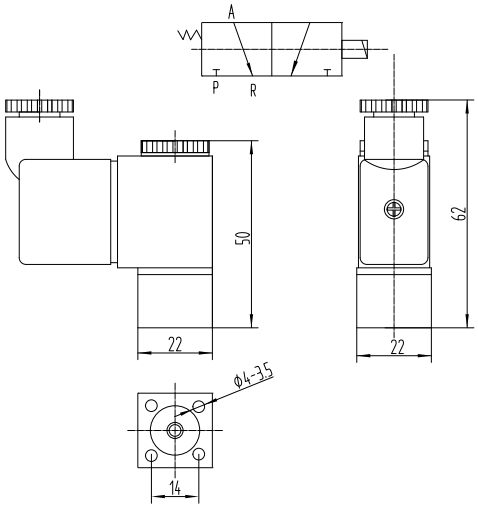

3V1-06B-nF

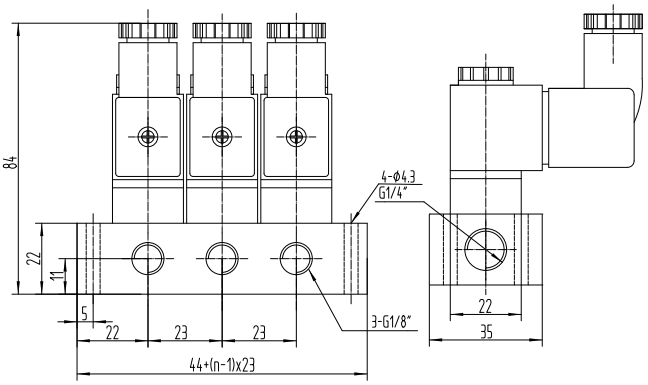

SOLENOID VALVE

DIRECTIONAL SOLENOID VALVE

Directional control valves are one of the most fundamental parts in hydraulic machinery as well and pneumatic machinery. They allow fluid flow into different paths from one or more sources.

Valve boies are mirror finished and Hard oxidation. Low power consumption, fast repsonse, import oils seals with longer sevice life. Coils with DIN connection or flying leads.





SPECIFICATION

Drive Type	Pilot & Solenoid
Mount	Inline or Manifold
Wiring	DIN Connector with LED
Insulation	F Class
Water/Dust Protection	IP65
Override	Manual, Locking (3V, 4V Series)
Pressure	22 - 116 PSI (1.5 - 8 Bar)
Temperature	-5~50 Celsius degree (41 - 122 Fahrenheit degree)
Voltage Tolerance	±10% of Rated Voltage
Highest Action Frequency	6 cycles/sec

HOW TO ORDER

4V	1	10	06	AC220V	W
Model	Series	Coil and Places	Joint Pipe	Standard Voltage	Wiring Form
4V: 2(3) way 5 position solenoid valve 4A: 2(3) way 5 position pneumatic control valve 3A: 2 way 3 position pneumatic control valve 4M: 2(3) way 5 position solenoid valve	100 series 200 series 300 series 400 series	10: Single-head Double -position 20: Double-head Double-position 30C: Double-head Three-position Close type 30E: Double-head Three-position Exhaust type 30P: Double-head Three-position Pressure type	M5: M5x0.8 06: 1/8" 08: 1/4" 10: 3/8" 15: 1/2"	DC12V DC24V AC24V 50HZ/60HZ AC110V 50HZ/60HZ AC220V 50HZ/60HZ AC380V 50HZ/60HZ	Blank: standard connector LD: Brown/White with lighting connector W: Lead wire type

☎+86 574 82823826 | Fax +86 574 82823826 | sales@xhnotion.com | Web: www.xhnotion.com



Model	Description	Thread	Flow (Cv)	Voltage
2V025-06	2 way Solenoid Valve	1/8	0.23	DC 12V DC24V AC110V AC 220V
2V025-08	2 way Solenoid Valve	1/4	0.23	



Model	Description			Voltage
Coil 100	Coil for 100 Series Solenoid Valves	DC 12V		DC 12V DC 24V AC 110V AC 220V
Coil 200	Coil for 200-400 Series Solenoid Valves	AC 220V		



Model	Description	Thread	Flow (Cv)	Voltage
4M210-06	2 way 5 position Single Head	1/8	0.78	DC 12V DC 24V AC 110V AC 220V
4M210-08	2 way 5 position Single Head	1/4	0.89	
4M220-06	2 way 5 position Double Head	1/8	0.78	
4M220-08	2 way 5 position Double Head	1/4	0.89	
4M230-06	3 way 5 position	1/8	0.67	
4M230-08	3 way 5 position	1/4	0.67	
4M310-08	2 way 5 position Single Head	1/4	1.40	
4M310-10	2 way 5 position Single Head	3/8	1.68	
4M320-08	2 way 5 position Double Head	1/4	1.40	
4M320-10	2 way 5 position Double Head	3/8	1.68	
4M330-08	3 way 5 position	1/4	1.00	
4M330-10	3 way 5 position	3/8	1.00	
4M410-15	2 way 5 position Single Head	1/2	2.79	
4M420-15	2 way 5 position Double Head	1/2	2.79	
4M430-15	3 way 5 position	1/2	1.68	





Model	Description	Thread	Flow (Cv)	Voltage
3V110-06	3 way 2 position Single Head	1/8	0.67	DC 12V AC 220V DC 12V AC 220V
3V210-08	3 way 2 position Single Head	1/4	0.89	
3V310-10	3 way 2 position Single Head	3/8	1.68	
3V410-15	3 way 2 position Single Head	1/2	2.79	

SOLENOID VALVE

DIRECTIONAL SOLENOID VALVE



Model	Description	Thread	Flow (Cv)	Voltage
3V120-06	3 way 2 position Double Head	1/8	0.67	DC 12V AC 220V DC 12V AC 220V
3V220-08	3 way 2 position Double Head	1/4	0.89	
3V320-10	3 way 2 position Double Head	3/8	1.68	
3V420-15	3 way 2 position Double Head	1/2	2.79	





Model	Description	Thread	Flow (Cv)	Voltage
4V110-M5	5 way 2 position Single Head	M5	0.56	DC 12V DC 24V AC 110V AC 220V
4V110-06	5 way 2 position Single Head	1/8	0.67	
4V120-M5	5 way 2 position Double Head	M5	0.56	
4V120-06	5 way 2 position Double Head	1/8	0.67	
4V130C-M5	5 way 3 position Center Closed	M5	0.56	
4V130C-06	5 way 3 position Center Closed	1/8	0.5	
4V130E-M5	5 way 3 position Center Exhaust	M5	0.56	
4V130E-06	5 way 3 position Center Pressure	1/8	0.5	
4V130P-M5	5 way 3 position Center Pressure	M5	0.56	
4V130P-06	5 way 3 position Center Pressure	1/8	0.5	





Model	Description	Thread	Flow (Cv)	Voltage
4V210-06	5 way 2 position Single Head (Exh. 1/8)	1/8	0.78	DC 12V DC 24V AC 110V AC 220V
4V210-08	5 way 2 position Single Head (Exh. 1/8)	1/4	0.89	
4V220-06	5 way 2 position Double Head (Exh. 1/8)	1/8	0.78	
4V220-08	5 way 2 position Double Head (Exh. 1/8)	1/4	0.89	
4V230C-06	5 way 3 position Center Closed (Exh. 1/8)	1/4	0.78	
4V230C-08	5 way 3 position Center Closed (Exh. 1/8)	1/8	0.89	
4V230E-06	5 way 3 position Center Exhaust (Exh. 1/8)	1/8	0.78	
4V230E-08	5 way 3 position Center Exhaust (Exh. 1/8)	1/4	0.89	
4V230P-06	5 way 3 position Exh. Center Pressure (Exh. 1/8)	1/8	0.78	
4V230P-08	5 way 3 position Exh. Center Pressure (Exh. 1/8)	1/4	0.89	





Model	Description	Thread	Flow(Cv)	Voltage
4V310-08	5 way 2 position Single Head (Exh. 1/4)	1/4	1.40	DC 12V DC 24V AC110V AC220V
4V310-10	5 way 2 position Single Head (Exh. 1/4)	3/8	1.68	
4V320-08	5 way 2 position Double Head (Exh. 1/4)	1/4	1.40	
4V320-10	5 way 2 position Double Head (Exh. 1/4)	3/8	1.68	
4V330C-08	5 way 3 position Center Closed (Exh. 1/4)	1/4	1.40	
4V330C-10	5 way 3 position Center Closed (Exh. 1/4)	3/8	1.68	
4V330E-08	5 way 3 position Exh. Center Exhaust (Exh. 1/4)	1/4	1.40	
4V330E-10	5 way 3 position Exh. Center Exhaust (Exh. 1/4)	3/8	1.68	
4V330P-08	5 way 3 position Exh. Center pressure (Exh. 1/4)	1/4	1.40	
4V330P-10	5 way 3 position Exh. Center pressure (Exh. 1/4)	3/8	1.68	



4V410-15	5 way 2 position Single Head	1/2	2.79	DC 12V DC 24V AC 110V AC 220V
4V420-15	5 way 2 position Double Head	1/2	2.79	
4V430C-15	5 way 3 position Center Closed	1/2	1.68	
4V430E-15	5 way 3 position Exh. Center Exhaust	1/2	1.68	
4V430P-15	5 way 3 position Exh. Center Pressure	1/2	1.68	

☎+86 574 82823826 | Fax +86 574 82823826 | sales@xhnotion.com | Web: www.xhnotion.com

PNEUMATIC CONTROL VALVE

Drive Type	Pilot
Mount	Inline or Manifold
Pressure	0.15~0.8 Mpa (21~114Psi)
Temperature	-5~60 Celsius degree (41 ~ 122 Fahrenheit degree)
Highest Action Frequency	5 cycles/sec



Model	Description	Thread	Flow (Cv)	
3A110-M5	3 way 2 position Single Head	M5	0.31	
3A120-M5	3 way 2 position Double Head	M5	0.31	
3A110-06	3 way 2 position Single Head	1/8	0.67	
3A120-06	3 way 2 position Double Head	1/8	0.67	
3A210-06	3 way 2 position Single Head	1/8	0.78	
3A220-06	3 way 2 position DoubleHead	1/8	0.78	
3A210-08	3 way 2 position Single Head	1/4	0.89	
3A220-08	3 way 2 position Double Head	1/4	0.89	
3A310-08	3 way 2 position Single Head	1/4	1.39	
3A320-08	3 way 2 position Double Head	1/4	1.39	
3A310-10	3 way 2 position Single Head	3/8	1.67	
3A320-10	3 way 2 position Double Head	3/8	1.67	
3A410-15	3 way 2 position Single Head	1/2	2.79	
3A420-15	3 way 2 position Double Head	1/2	2.79	
4A110-M5	5 way 2 position Single Head	M5	0.31	
4A120-M5	5 way 2 position Double Head	M5	0.31	
4A130C-M5	5 way 3 position Mid-position Closed	M5	0.28	
4A130E-M5	5 way 3 position Mid-position Vented	M5	0.28	
4A130P-M5	5 way 3 position Mid-position Open	M5	0.28	
4A110-06	5 way 2 position Single Head	1/8	0.67	
4A120-06	5 way 2 position Double Head	1/8	0.67	
4A130C-06	5 way 3 position Mid-position Closed	1/8	0.50	
4A130E-06	5 way 3 position Mid-position Vented	1/8	0.50	
4A130P-06	5 way 3 position Mid-position Open	1/8	0.50	



PNEUMATIC CONTROL VALVE



Model	Description	Thread	Flow (Cv)	
4A210-06	5 way 2 position Single Head	1/8	0.78	
4A220-06	5 way 2 position Double Head	1/8	0.78	
4A230C-06	5 way 3 position Mid-position Closed	1/8	0.67	
4A230E-06	5 way 3 position Mid-position Vented	1/8	0.67	
4A230P-06	5 way 3 position Mid-position Open	1/8	0.67	
4A210-08	5 way 2 position Single Head	1/4	0.89	
4A220-08	5 way 2 position Double Head	1/4	0.89	
4A230C-08	5 way 3 position Mid-position Closed	1/4	0.67	
4A230E-08	5 way 3 position Mid-position Vented	1/4	0.67	
4A230P-08	5 way 3 position Mid-position Open	1/4	0.67	
4A310-08	5 way 2 position Single Head	1/8	1.39	
4A320-08	5 way 2 position Double Head	1/8	1.39	
4A330C-08	5 way 2 position Mid-position Closed	1/8	1.00	
4A330E-08	5 way 3 position Mid-position Vented	1/8	1.00	
4A330P-08	5 way 3 position Mid-position Open	1/8	1.00	
4A310-10	5 way 3 position Single Head	1/8	1.67	
4A320-10	5 way 2 position Double Head	1/4	1.67	
4A330C-10	5 way 3 position Mid-position Closed	1/4	1.00	
4A330E-10	5 way 3 position Mid-position Vented	1/4	1.00	
4A330P-10	5 way 3 position Mid-position Open	1/4	1.00	
4A410-15	5 way 2 position Single Head	1/2	2.79	
4A420-15	5 way 2 position Double Head	1/2	2.79	
4A430C-15	5 way 3 position Mid-position Closed	1/2	1.68	
4A430E-15	5 way 3 position Mid-position Vented	1/2	1.68	
4A430P-15	5 way 3 position Mid-position Open	1/2	1.68	

☎+86 574 82823826 | Fax +86 574 82823826 | sales@xhnotion.com | Web: www.xhnotion.com

MECHANICAL VALVE

Action Type	Direct
Mount	Inline or Manifold
Pressure	0~0.8 Mpa (0~114Psi)
Temperature	-5~60 Celsius degree
Medium	Air

HOW TO ORDER

MSV98 | 32 | 1 | PPL

Series:
MSV86
MSV98

Type:
32: 3 position 2 way
52: 5 position 2way

Joint Pipe:
1: 1/8"
2: 1/4"

Button:
Blank: Plunger
PPL: Convex Push Button
PP: Flat Push Button
EB: Red Mushroom Button
PB: Green Mushroom Button
R: Roller
TB: Selector
LB: Twist Lever

Push Button Valves (Mini)

	Model	Description	Thread	Flow (Cv)	
	MSV86321	3/2 Direct Plunger Operated MINI Valve	1/8	0.67	
	MSV86321PPL	3/2 Green Convex Push Button MINI Valve	1/8	0.67	
	MSV86321PP	3/2 Green Flat Push Button MINI Valve	1/8	0.67	
	MSV86321EB	3/2 Green Mushroom Button MINI Valve	1/8	0.67	
	MSV86321PB	3/2 Red Mushroom Button MINI Valve Detented	1/8	0.67	
	MSV86321R	3/2 Roller Type MINI Valve	1/8	0.67	
	MSV86321TB	3/2 Selector Type MINI Valve Detented	1/8	0.67	

PUSH BUTTON VALVES					
	Model	Description	Thread	Flow (Cv)	
	MSV98321	3/2 Direct Plunger Operated Valve	1/8	0.89	
	MSV98322	3/2 Direct Plunger Operated Valve (Exh. 1/8")	1/4	0.89	
	MSV86521	5/2 Direct Plunger Operated Valve	1/8	0.89	
	MSV86522	5/2 Direct Plunger Operated Valve (Exh. 1/8")	1/4	0.89	
	MSV98321PPL	3/2 Green Convex Push Button Valve	1/8	0.89	
	MSV98322PPL	3/2 Green Convex Push Button Valve (Exh. 1/8")	1/4	0.89	
	MSV86521PPL	5/2 Green Convex Push Button Valve	1/8	0.89	
	MSV86522PPL	5/2 Green Convex Push Button Valve (Exh. 1/8")	1/4	0.89	
	MSV98321PP	3/2 Green Flat Push Button Valve	1/8	0.89	
	MSV9832PP	3/2 Green Flat Push Button Valve (Exh. 1/8")	1/4	0.89	
	MSV865221PP	5/2 Green Flat Push Button Valve	1/8	0.89	
	MSV86522PP	5/2 Green Flat Push Button Valve (Exh. 1/8")	1/4	0.89	
	MSV98321PB	3/2 Green Mushroom Push Button Valve	1/8	0.89	
	MSV98322PB	3/2 Green Mushroom Push Button Valve (Exh. 1/8")	1/4	0.89	
	MSV86521PB	5/2 Green Mushroom Push Button Valve	1/8	0.89	
	MSV86522PB	5/2 Green Mushroom Push Button Valve (Exh. 1/8")	1/4	0.89	
	MSV98321EB	3/2 Red Mushroom Detented Valve	1/8	0.89	
	MSV98322EB	3/2 Red Mushroom Detented Valve (Exh.1/8")	1/4	0.89	
	MSV86521EB	5/2 Red Mushroom Detented Valve	1/8	0.89	
	MSV86522EB	5/2 Red Mushroom Detented Valve (Exh. 1/8")	1/4	0.89	
	MSV98321R	3/2 Roller Type Valve	1/8	0.89	
	MSV98322R	3/2 Roller Type Valve (Exh. 1/8")	1/4	0.89	
	MSV86521R	5/2 Roller Type Valve	1/8	0.89	
	MSV86522R	5/2 Roller Type Valve (Exh. 1/8")	1/4	0.89	
	MSV98321TB	3/2 Selector Type Detented Valve	1/8	0.89	
	MSV98322TB	3/2 Selector Type Detented Valve (Exh. 1/8")	1/4	0.89	
	MSV86521TB	5/2 Selector Type Detented Valve	1/8	0.89	
	MSV86522TB	5/2 Selector Type Detented Valve (Exh. 1/8")	1/4	0.89	
	MSV98321LB	3/2 Twist Lever Type Detented Valve	1/8	0.89	
	MSV98322LB	3/2 Twist Lever Type Detented Valve (Exh. 1/8")	1/4	0.89	
	MSV86521LB	5/2 Twist Lever Type Detented Valve	1/8	0.89	
	MSV86522LB	5/2 Twist Lever Type Detented Valve (Exh. 1/8")	1/4	0.89	

☎+86 574 82823826 | Fax +86 574 82823826 | sales@xhnotion.com | Web: www.xhnotion.com

HAND LEVER VALVES

	Model	Description	Thread	Flow (Cv)	
	3R110-06	3/2 Push-Pull Detented Valve	1/8	0.89	
	3R210-08	3/2 Push-Pull Detented Valve (Exh. 1/8")	1/4	0.78	
	4R110-06	5/2 Push-Pull Detented Valve	1/8	0.89	
	4R210-08	5/2 Push-Pull Detented Valve (Exh. 1/8")	1/4	0.78	
	4H210-06	5 way 2 position 1/8 Detented	1/8	0.89	
	4H210-06S	5 way 2 position 1/8 Spring Reset	1/8	0.78	
	4H210-08	5 way 2 position 1/4 Detented (Exh. 1/8)	1/4	0.89	
	4H210-08S	5 way 2 position 1/4 Spring Reset (Exh. 1/8)	1/4	0.89	
	4H230C-08	5 way 3 position 1/4 Detented Closed Center (Exh. 1/8)	1/4	0.67	
	4H230-08S	5 way 3 position 1/4 Spring Reset (Exh. 1/8)	1/4	0.67	
	4H310-10	5 way 2 position 3/8 Detented (Exh. 1/4)	3/8	1.4	
	4H310-10S	5 way 2 position 3/8 Spring Reset (Exh. 1/4)	3/8	1.4	
	4H330C-10	5 way 3 position 3/8 Detented Closed Center (Exh. 1/4)	3/8	1	
	4H330-10S	5 way 3 position 3/8 Spring Reset (Exh. 1/4)	3/8	1	
	4H410-15	5 way 2 position 1/2 Detented	1/2	2.79	
	4H410-15S	5 way 2 position 1/2 Spring Reset	1/2	2.79	
	4H430C-15	5 way 3 position 1/2 Detented Closed Center	1/2	1.68	
	4H430-15S	5 way 3 position 1/2 Spring Reset	1/2	1.68	

HAND SWITCH VALVES/FOOT VALVES					
	Model	**Description**	**Thread**	**Flow (Cv)**	
	HV400-02	4 way 3 position 1/4	1/4	1.68	
	HV400-03	4 way 3 position 3/8	3/8	1.68	
	HV400-04	4 way 3 position 1/2	1/2	1.68	
	4HV210-06	4 way 2 position 1/8	1/8		
	4HV230-06	4 way 3 position 1/8 Closed Center	1/8		
	4HV210-08	4 way 2 position 1/4	1/4		
	4HV230C-08	4 way 3 position 1/4 Closed Center	1/4		
	4HV310-10	4 way 2 position 3/8	3/8		
	4HV330C-10	4 way 3 position 3/8 Closed Center	3/8		
	4HV310-15	4 way 2 position 1/2	1/2		
	4HV330C-15	4 way 3 position 1/2 Closed Center	1/2		
	FV320	3 way 2 position 1/4	1/4		
	FV420	4 way 2 position 1/4	1/4		
	4F210-08	4 way 2 position 1/4	1/4		
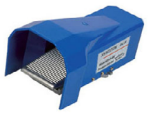	4F210-08G	4 way 2 position 1/4 with Guard	1/4		
	4F210-08LG	4 way 2 position 1/4 with Guard and Lock	1/4		

SHUTTLE VALVE

Shuttle valve allows fluid to flow through it from one of two sources. When pressure flow in an opening end, it pushes the ball towards the opposite end, air flow through the middle opening.

Drive Type	Direct
Working Medium	Air
Working Pressure	0-1.0Mpa
Ambient Temperature	0-60℃

	Model	**Description**	**Thread**		
	SV-01	Shuttle Valve	1/8		
	SV-02	Shuttle Valve	1/4		
	SV-03	Shuttle Valve	3/8		
	SV-04	Shuttle Valve	1/2		
	Body Material - Aluminum				

☎+86 574 82823826 | Fax +86 574 82823826 | sales@xhnotion.com | Web: www.xhnotion.com

FLOW CONTROL/THROTTLE VALVE

A flow control valve is a needle valve with a check valve build in it. it allow flow go freely in one direction and restrict it in the other direction.

Drive Type	Direct
Working Medium	Air
Working Pressure	0-0.95 Mpa
Ambient Temperature	0-60 ℃



Model	Description	Thread		
ASC-01	Speed Control Female-Female	1/8		
ASC-02	Speed Control Female-Female	1/4		
ASC-03	Speed Control Female-Female	3/8		
ASC-04	Speed Control Female-Female	1/2		
RE-01	Speed Control Female-Female	1/8		
RE-02	Speed Control Female-Female	1/4		
RE-03	Speed Control Female-Female	3/8		
RE-04	Speed Control Female-Female	1/2		
Body Material - Aluminum				

CHECK VALVE

Check valve permits the air flow in one direction but stops it in the reverse direction

Fluid Type	Air(No other type of gas or liquid)
Operating Pressure Range	1-9.9kgf/cm2 (1-150psi)
Negative Pressure	-750mmHg
Operating Temperature Range	0-60℃（32-140 ℉）



Model	Description	Thread		
KA-06	Check Valve Female-Female	1/8		
KA-08	Check Valve Female-Female	1/4		
KA-10	Check Valve Female-Female	3/8		
KA-15	Check Valve Female-Female	1/2		
KA-20	Check Valve Female-Female	3/4		
KA-25	Check Valve Female-Female	1		
KA-32	Check Valve Female-Female	1-1/4		
KA-40	Check Valve Female-Female	1-1/2		
KA-50	Check Valve Female-Female	2		
Body Material: Aluminum				

QUICK EXHAUST VALVE

The purpose of the Quick Exhaust Valve is to increase the cycle speed of a cylinder. When pressure is removed from the input port, back flow at the output port will unseat the valve's internal components, relieving large amounts of flow in the shortest time.

Drive Type	Direct
Working Medium	Air
Working Pressure	0-1.0Mpa
Ambient Temperature	0-60℃

	Model	Description	Thread		
	QE-01	Quick Exhaust Valve	1/8		
	QE-02	Quick Exhaust Valve	1/4		
	QE-03	Quick Exhaust Valve	3/8		
	QE-04	Quick Exhaust Valve	1/2		
	QE-06	Quick Exhaust Valve	3/8		
	Body Material - Aluminum				
	QEV-06	Quick Exhaust Valve	1/8		
	QEV-08	Quick Exhaust Valve	1/4		
	QEV-10	Quick Exhaust Valve	3/8		
	QEV-15	Quick Exhaust Valve	1/2		
	Body Material - Nickel Plated Brass				

HAND SLIDING VALVE

Hand sliding valve can be used as switch of air source. When air source is switched off, the remained air insystem can be released.

Drive Type	Direct
Working Medium	Filtered and Compressed Air
Working Pressure	0-1.0 Mpa
Ambient Temperature	5-60 ℃
Operating Force	20N

	Model	Description	Thread		
	HSV-01	3 Way 2 Position Male-Female	1/8		
	HSV-02	3 Way 2 Position Male-Female	1/4		
	HSV-03	3 Way 2 Position Male-Female	3/8		
	HSV-04	3 Way 2 Position Male-Female	1/2		

☎+86 574 82823826 | Fax +86 574 82823826 | sales@xhnotion.com | Web: www.xhnotion.com

MANIFOLD VALVE

It is available to integrate the directiional conrtol valves of the same series to form valve group to save space and cost. It is easy to examine when there are faults owning to the unified air intake and exhaust and unified wiring.

Flexible combination and strong expansion capability can make any combination or expansion of the numbers of directional control valves that are connected.



Manifolds				
Model	**Description**			
4V100M-2	2 Row Manifold for 4V100 Series Solenoid Valves			
4V100M-4	4 Row Manifold for 4V100 Series Solenoid Valves			
4V100M-6	6 Row Manifold for 4V100 Series Solenoid Valves			
4V100M-8	8 Row Manifold for 4V100 Series Solenoid Valves			
4V100M-BP	Block Off Plate			
4V200M-2	2 Row Manifold for 4V200 Series Solenoid Valves			
4V200M-4	4 Row Manifold for 4V200 Series Solenoid Valves			
4V200M-6	6 Row Manifold for 4V200 Series Solenoid Valves			
4V200M-8	8 Row Manifold for 4V200 Series Solenoid Valves			
4V200M-BP	Block Off Plate			
4V300M-2	2 Row Manifold for 4V300 Series Solenoid Valves			
4V300M-4	4 Row Manifold for 4V300 Series Solenoid Valves			
4V300M-6	6 Row Manifold for 4V300 Series Solenoid Valves			
4V300M-8	8 Row Manifold for 4V300 Series Solenoid Valves			
4V300M-BP	Block Off Plate			
4V400M-2	2 Row Manifold for 4V200 Series Solenoid Valves			
4V400M-4	4 Row Manifold for 4V200 Series Solenoid Valves			
4V400M-6	6 Row Manifold for 4V200 Series Solenoid Valves			
4V400M-8	8 Row Manifold for 4V200 Series Solenoid Valves			
4V400M-BP	Block Off Plate			
Material: Aluminum				
Mounting Hardware, Seals included				